DWG No. Coping Gauge Example 1

TITLE 1 SPACER

TITLE 2 31mm VERSION

_ nr TOTAL REQUIRED

***quantity for customer's approval only, for fabrication purposes check quantity on live work order.

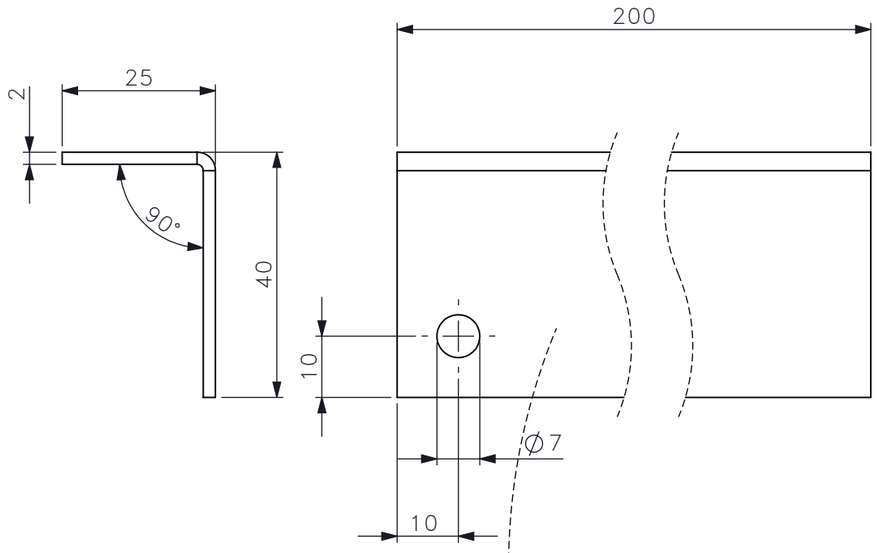

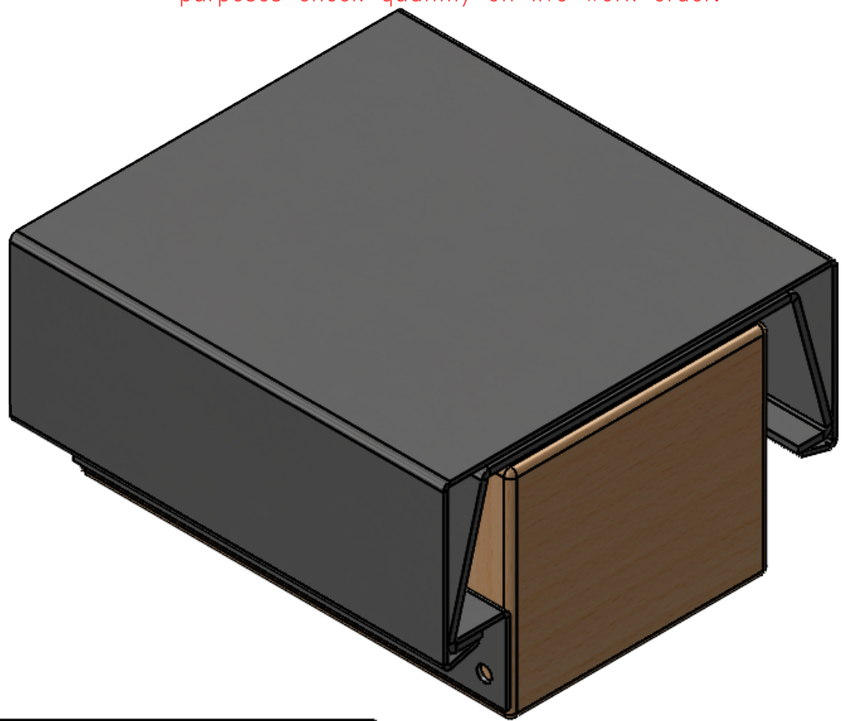

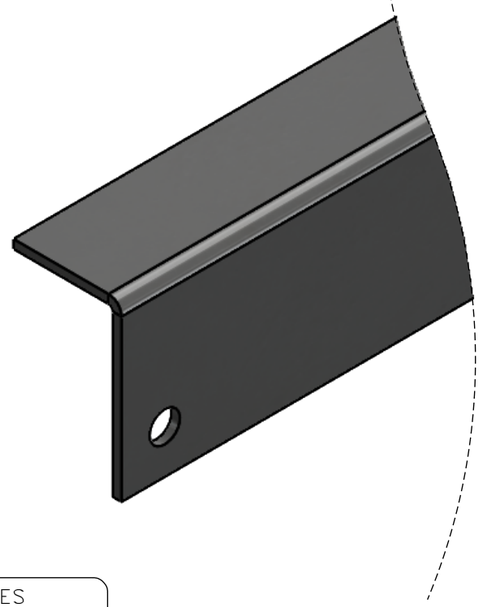

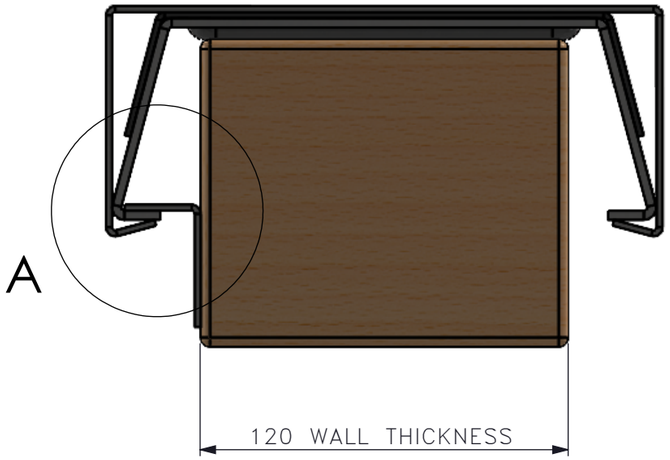

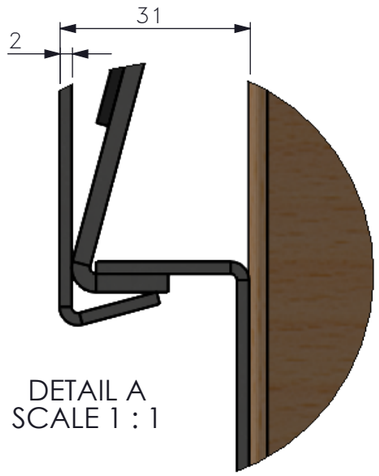

DETAIL A
SCALE 1 : 1

TOLERANCES	
LINEAR +/−	1mm
ANGULAR +/−	1.0°

CUSTOMER'S APPROVAL

FULL NAME DD/MM/YYYY SIGNATURE

ALUMASC
WATER MANAGEMENT SOLUTIONS

ALUMASC WATER MANAGEMENT SOLUTIONS
Station Road, Burton Latimer, Kettering,
Northamptonshire, NN15 5JP

Available from the Gutter Centre
Tel: 0330 2231731
or email:sales@guttercentre.co.uk

SOR NO.	##SOR NO##
LINE NO.	##LINE NO##
PROJECT:	##PROJECT REF##
CUST REF:	##CUST REF##
SP REF NO.	##SP NO##

STAGE	DD/MM/YY	INITIALS
CUT		
PUNCH		
BRAKE		
WELD		

FOR PART QUANTITIES, AND REQUIRED FINISH, PLEASE REFER TO WORKS ORDER ##SOR NO## ACCOMPANYING THIS DRAWING

PARTS REQUIRING PPC FINISHES WILL REQUIRE (2) HANGING HOLES.

PLEASE NOTE PPC PARTS MAY REQUIRE HANGING HOLES IN SHOW FACE TO ENABLE PRODUCT TO BE HUNG VERTICALLY THROUGH PPC PLANT

SHOW FACES INDICATED BY AN ASTERISK "*"

IMPORTANT:
AWMS OFFER DESIGN ASSISTANCE ONLY.
ALL DIMENSIONS ARE TO BE VERIFIED BY CUSTOMER

IF IN DOUBT, ASK!

Copyright © 2017 all rights reserved, this drawing is the property of Alumasc Exterior Building Products.

UNLESS OTHERWISE SPECIFIED: DIMENSIONS ARE IN MILLIMETERS

PROJECTION: THIRD ANGLE

DATE:	DESCRIPTION	REV

APPROVED:	APRV DATE:
MATERIAL: SEE DRAWING	WEIGHT (KG): –
TITLE 1: SPACER	REV.
TITLE 2: 31mm VERSION	
DRAWN: LMcK	DATE: 21/10/2025
SCALE: 1:5 @ A3	SHEET: 1 OF 1

DWG No. Coping Gauge Example 1

Designers, including but not limited to, Engineers and Architects, must satisfy themselves in respect of the adequacy of the design provided by Alumasc Water Management Solutions ("Alumasc"). It is the Designer's responsibility to ensure that the data has been correctly interpreted. Alumasc accepts no liability for inadequate or inaccurate designs based on limited or false information supplied by the Designer or misinterpretation of the data supplied. For the avoidance of doubt, designs provided by Alumasc prior to an order being placed are for illustrative purposes only and should not be relied upon save for at the Designer's own risk. Drawings issued by Alumasc in respect of an order after that order has been placed shall be fit for the purpose for which it was created.