Roof edge trim profile Series T plus

- two-piece extruded aluminium profile
- front height: 105 - 175 mm
- time-saving and easy installation
- for roof slopes › 5° or with parapet

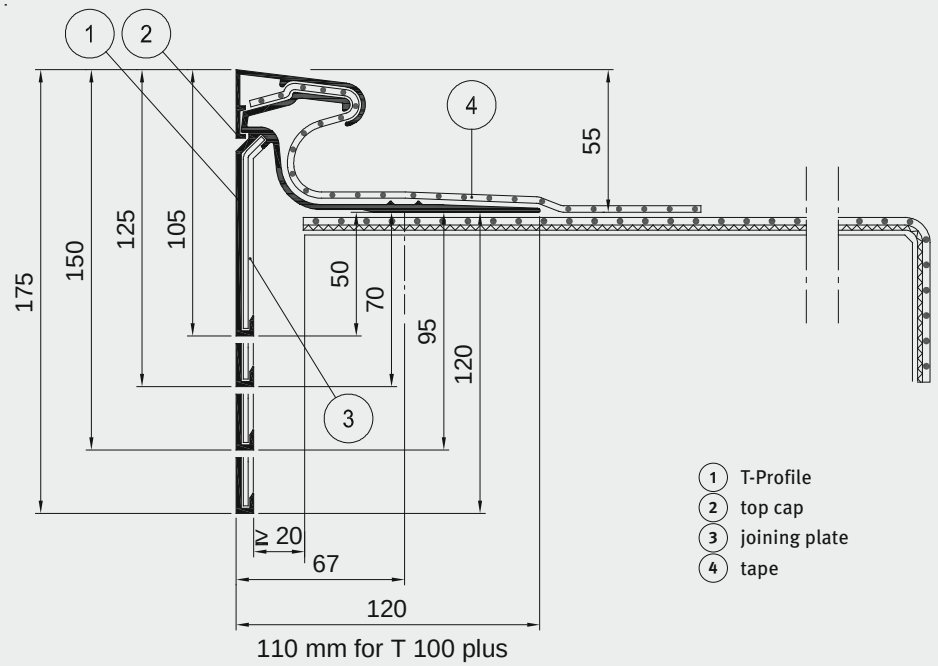

alwitra roof edge trim profiles series T can be installed:

- on roof edges with upstands (parapet) and
- on roof edges of roofs with a slope › 5°

alwitra roof edge trim profile Series T plus:

- two-piece extruded aluminium profile, corrosion resistant
- 2.5 m long top caps for easy connection of various waterproofing membranes
- 5.0 m long T-profiles in 4 different front heights (105, 125, 150, 175 mm)
- easy and quick installation by means of the pre-drilled horizontal leg
- rain resistant butt joints ensured by joining plates, permanently located at the centre of the join
- incl. ready-to-install external and internal corners with 200 mm long corner legs
- with rigid horizontal leg for in-line fastening as well as for protecting the roof waterproofing against wind uplift along the roof edge

Roof edge trim profile
Series T plus – application examples